Dart Aerospace Ltd.
1270 Aberdeen St
Hawkesbury, ON
K6A 1K7
Canada

Tel (613) 632-5200
Fax 613 632-5246

Splt 2

RBW6205G00632-3G
Job Sheet 183987

Part No: RBW6205G00632-3G **Job Qty:** 3 ea
Part Name: Sling, Main Rotor Blade Lift

Part Weight: 0 lbs **Status:** Scheduled **Priority:** Medium
Job Created: 10/1/18 **Job Tracking No:**
Due Date: 12/17/18 **Created By:** Patrick Lussier
Type: Stock **Description:** GA-Mat
Note: DWG RBW6205G00632-3G Rev 6 IPP Rev A 18.01.11 New issue DP Verify DD
Ship Via:

Bill of Materials

Job Routing

Op No	Operation	Qty	Start Date	Due Date	Standard Setup hrs	Standard Run Hrs	Workcenter/Supplier Workcenter / Supplier	Lead Time	Sign-off
100	**Purchasing**	3 pcs		12/17/18	0.00	0.00	Purchasing		DEC 17 2018
110	**Packaging**	3 pcs		12/17/18	0.00	0.00	Packaging2		DEC 17 2018
120	**QC**	3 pcs		12/17/18	0.00	0.00	QC6		DAS 38
121	**Small Fab**	3 pcs		12/17/18	0.00	6.00	Small Fab-5		MLC 9-89 DAS 38
122	**QC**	3 pcs		12/17/18	0.00	0.00	QC5		DAS 9-89
130	**Packaging**	3 pcs		12/17/18	0.00	0.00	Packaging3		21 DEC 20 2018
140	**QC21-FG**	3 Ea		12/17/18	0.00	0.00	QC21		

Part Op Descriptions: **100** - Issue P/O: 041199 MANUFACTURE RBW6205G00632-3G AS PER DWG Supplier: METEC Certificate of conformity is required

121 - PERFORM FIRST ARTICLE WEIGHT TEST 1. AFTER INSPECTION, PLACE 300 LBS. IN M/R BLADE LIFTING TOOL. LIFT M/R BLADE LIFTING TOOL USING AN APPROPRIATE LIFTING DEVICE, FOR AT LEAST 5 MINUTES, CONTINUALLY CHECKING FOR CRACKS, DEFLECTION, OR DISTORTION. 2- REMOVE WEIGHT AND RE-INSPECT TOOL, CHECKING FOR STRESS CRACKS, BENDING, OR DISTORTIONS. Fill out inspection sheet. (sheet 47). 3- Engrave RB41011 placard. 4-Transfer drill placard as per DWG. 5-Using #2 drive screws install placard 6-Apply sticker as per DWG.

oct 01 x3

Job BOM

	Part / Item	Component Name	Quantity	Operation	Container
	RBW6205G00632-3GP	Sling, Main Rotor Blade Lift	3 pcs (1 ea)	100-Purchasing	S137937
61	90081A074	0.125 X 0.500 Drive Screw	12 Ea (4 ea)	121-Small Fab	5047591
	RB41011	Dart Tooling Placard, Aluminum	3 Ea (1 ea)	121-Small Fab	5021040
95	RBW6205G00632-3G-77	Sticker	3 Ea (1 ea)	121-Small Fab	5050555

Job Allocations

Operation	Component Part	Required	Inventory	Allocated
100-Purchasing	RBW6205G00632-3GP	3	0	0
121-Small Fab	90081A074	12	76	0
	RB41011	3	771	0
	RBW6205G00632-3G-77	3	4	0

Dart Aerospace Ltd.
1270 Aberdeen Street
Hawkesbury, ON K6A 1K7
CANADA
TEL : 1 613 632-5200
Email: sales@dartaero.com
www.dartaerospace.com

Container No: S137938

Part: RBW6205G00632-3G
Job No: 183987
Serial No/Batch: S137938
Revision: 6
Inspector:
Exp Date:
Instructions:

Date: 12/17/18

Part Specifications

Specifications could not be found.

Plex 10/1/18 11:36 AM dart.Lussier.Patrick

This drawing, specifications, and concepts contained here in are the sole property of Dart Aerospace, and may not be reproduced or used in any fashion without the prior written permission of Dart Aerospace Eugene, OR.

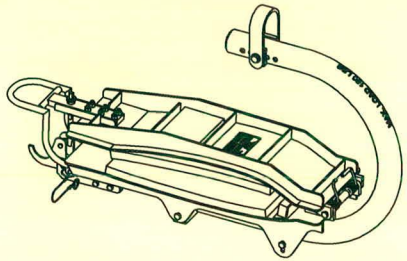

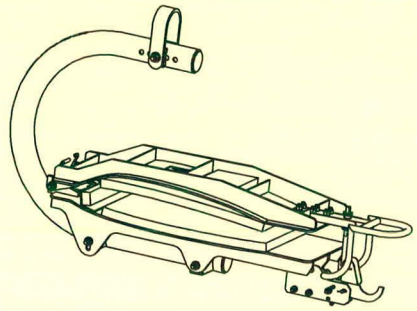

ASSY -69	ASSY -50	ASSY -43	ASSY -37	ASSY -27	ASSY -15	ASSY -1	B/O	Part #	UNIT QTY	Description	Material	B/O INFORMATION OR SPECIFICATIONS	PG.
						X		-1	1	LOWER JAW WELDMENT			4
						2		-3		LOWER JAW SIDE PLATE	6061		5
						1		-5		LOWER JAW FACE PLATE	5052		6
						1		-7		LOWER JAW LATCH PLATE	6061		7
						1		-9		LOWER JAW ANGLE	5052		8
					2	2		-11		HINGE PLATE	6061		9
					4	5		-13		LOWER JAW BRACE	6061		10
					X			-15	1	UPPER JAW WELDMENT			11
					2			-17		UPPER JAW SIDE PLATE	6061		12
					1			-19		UPPER JAW PLATE	5052		13
					1			-21		ANGLE BRACE	6063		14
					1			-23		ANGLE BRACE 2	6063		15
					2			-25		UPPER JAW BRACE, SHORT	6061		16
				X				-27	1	HANDLE WELDMENT			17
				1				-29		HANDLE	6063		18
				2				-31		HANDLE ARM	6063		19
				1				-33		HANDLE BRACE	6063		20
				1				-35		LATCH BLOCK	6061		21
			X					-37	1	HOOK WELDMENT			22
			1					-39		ROD	304 S.S.		23
			1					-41		HOOK	304 S.S.		24
		X						-43	1	LATCH WELDMENT			25
		1						-45		LATCH CATCH	5052		26
		1						-47		LATCH HOOK	6061		27
								-49	2	LATCH BRACKET	6061		28
	X							-50	1	LIFT ARM WELDMENT			29
	1							-51		LIFT ARM	6061		30
	2							-52		LIFT ARM END CAP	6061		31
								-53	1	CLEVIS	A-36 P & O		32
								-55	2	SPACER BLOCK	6061		33
								-57	4	HANDLE BLOCK	6061		34
								-59	1	HINGE SPACER	6061		35
								-61	1	SHORT HINGE SPACER	6061		36
							B/O	-63	2	FOAM	T-20	3/4 X 8 X 15-1/8 (CASE SOLUTIONS)	37
							B/O	-65	1	FOAM, ANGLE BLOCK	T-20	3/4 X 1-1/8 X 8 (CASE SOLUTIONS)	38
							B/O	-67	2	FOAM BACKING	NEOPRENE	1/8 X 8 X 15-1/4 GASKET SPECIALITY	39
X								-69	2	SPRING ASSEMBLY			40
1							B/O	-71		SPRING	S.S.	DENDOFF	41
1								-73		TUBE, LONG	NYLON	Ø1/4 OD .17 ID X1-3/8 (MCMASTER-CARR #5548K64)	42
1								-75		TUBE, LONG	NYLON	Ø1/4 OD .17 ID X 1/2 (MCMASTER-CARR #5548K64)	43
							B/O	-77	1	STICKER	VINYL, BLACK	TEXT: ARIAL HT; 1/2 SIGNS NOW	44

ASSY -69	ASSY -50	ASSY -43	ASSY -37	ASSY -27	ASSY -15	ASSY -1	B/O	Part #	UNIT QTY	Description	Material	B/O INFORMATION OR SPECIFICATIONS	PG.
							B/O	-81	2	BOLT	STEEL	5/16-24 X 7 (MCMASTER-CARR #91257A453)	3
							B/O	-83	1	BOLT	STEEL	5/16-24 X 6-1/2 (MCMASTER-CARR #91257A451)	3
							B/O	-85	3	LOCK NUT	STEEL	5/16-24 (MCMASTER-CARR #97135A225)	3
							B/O	-87	3	WASHER	STEEL	Ø5/16 (MCMASTER-CARR #90126A030)	3
							B/O	-89	5	BOLT	STEEL	1/4-28 X 1-1/4 (MCMASTER-CARR #91286A138)	3
							B/O	-91	6	MACHINE SCREW	S.S.	1/4-28 X 1-1/4 (MCMASTER-CARR #91771A563)	3
							B/O	-93	5	LOCK NUT	STEEL	1/4-28 (MCMASTER-CARR #97135A215)	3
							B/O	-95	16	WASHER	STEEL	1/4 (MCMASTER-CARR #95229A420)	3
							B/O	-97	2	SPACER	AL	Ø1/2 X 1/8 (MCMASTER-CARR #92510A760)	3
							B/O	-99	1	BOLT	STEEL	3/8-24 X 3-3/4 (MCMASTER-CARR #91257A464)	3
							B/O	-101	1	LOCK NUT	STEEL	3/8-24 (MCMASTER-CARR #97135A235)	3
							B/O	-103	2	WASHER	STEEL	3/8 (MCMASTER-CARR #98023A031)	3
							B/O	-105	2	THUMB NUT	S.S.	3/8-16 (MCMASTER-CARR #95150A190)	3
							B/O	-107	1	CLEVIS PIN	S.S.	Ø1/4 X 1 (MCMASTER-CARR #92390A159)	3
							B/O	-109	1	CLEVIS PIN	S.S.	Ø1/4 X 1-1/8 (MCMASTER-CARR #92390A160)	3
							B/O	-111	1	SPACER	STEEL	Ø1/2 OD X Ø1/4 ID X 3/4 (MCMASTER-CARR #92415A867)	3
								-113	1	LATCH SPRING	302 S.S.	Ø.25 OD X Ø.026 X 2 (MCMASTER-CARR #9665K85) MODIFIED	45
							B/O	-115	1	BALL LOCK PIN	S.S.	Ø1/4 X 3/4 (MCMASTER-CARR #92384A033)	3
							B/O	-117	2	COTTER PIN	STEEL	Ø1/16 X 3/4 (MCMASTER-CARR #98338A105)	3
							B/O	-123	4	#2 DRIVE SCREW	COATED STEEL	1/8 (MCMASTER-CARR #90081A074)	3
							B/O	-125	1	LANYARD	STEEL	Ø1/16 X 6 (CARR LANE #CL2C)	3
							B/O	-127	2	FERRULE	ALUMINUM	Ø1/16 X 3/8 (MCMASTER-CARR #3896T31)	3
							B/O	-129	1	SPLIT RING	STEEL	Ø7/8 (MCMASTER-CARR #90177A217)	3
							B/O	-131	6	THIN LOCK NUT	STEEL	1/4-28 (SPENCER AIRCRAFT #MS21083-N4)	3
							B/O	-133	1	FOAM PAD	Y20 BLACK	1 X 3-3/4 X 5 IR SPECIALTIES	46
									1	DART PLACARD	ALUMINUM	#RB41011	3

DART AEROSPACE

TITLE	TOOL, M/R BLADE LIFTING
DWG NO.	RBW6205G00632-3G
REV	6
MAT'L	
HEAT TREAT	
FINISH	
SPEC	
DRAWN BY:	GILBERT
CHECKED:	CLOUGH
OPPS APPR:	ANDERSON
QA APPR:	LINDSAY
APPROVED:	GILBERT
SCALE	1:6
DATE	2/21/2013

UNLESS OTHERWISE SPECIFIED DIMENSIONS ARE IN INCHES
.XXX ± .005 FRACTIONS ± 1/8
.XX ± .01 ANGLES ±.5°
.X ± .1 SURFACES = 125
1. BREAK ALL SHARP EDGES .015 x 45° OR .015R
2. DIMENSIONAL LIMITS APPLY AFTER PLATING
3. INTERPRET DIM AND TOL PER ASME Y14.5M-2009

USED ON MODEL: AW139

SHEET 1 OF 47

DART AEROSPACE

Dart Aerospace Ltd.
1270 Aberdeen St
Hawkesbury, ON
K6A 1K7
Canada

Tel (613) 632-5200

PURCHASE ORDER PO041199

Supplier: MEM001-VC
Metec Metal Technology Inc.
20 Terry Fox Drive PO Box 781
Vankleek Hill
ON
K0B 1R0 Canada
Phone: 613 678 3957
Fax: 613 678 3956

Attention: Walz, Shigi

Ship To: 1270 Aberdeen Street
Hawkesbury
ON
K6A 1K7 Canada
Phone: 613-632-5200

PO No: PO041199
PO Date: 10/1/18
Due Date: 12/17/18
Purchase Order Revision:
Revision Date:
Ship-To Contact: Phone:

Via: Ground
Pymt Terms: Net 60
Freight Terms:
Special Comments:

Revision

Items

Line Item	Job	Part	Supplier Part No	Item No	Description	Status	Account	Due Date	Order Quantity	Received Quantity	Balance	Unit Price (CAD)	Extended Price
1 X	183987	RBW6205G00632-3GP 3X DEC 17 2018			Sling, Main Rotor Blade Lift As per Dwg RBW6205G00632-3G Rev. 6	Firmed	-	12/17/18	3 pcs ORDER 7086 ORDER 7393	0 pcs	3 pcs ~~JAN 08. 2019~~ JAN 08. 2019.	$6,548.85/pcs	$19,646.55 16dec20
Line Item Note	SIOP												
2 X	183988	RBW6205G11532-3GP			Swashplate Support Stand As Per Dwg RBW6205G11532-3G REV 5	Firmed	-	12/17/18	2 pcs ORDER 11508	0 pcs	2 pcs JAN 31. 2019.	$8,811.00/pcs	$17,622.00
Line Item Note	SIOP												
3 X	183990	RBW7105G00231-3GP			Engine Lifting Tool As Per Dwg RBW7105G00231-3G Rev. 10	Firmed	-	12/17/18	~~2~~ pcs 1	0 pcs	2 pcs	$2,879.00/pcs	$5,758.00
Line Item Note	SIOP												
4 X	183991	RBW7105G00131-3GP			Engine Transport Stand As Per Dwg RBW7105G00131-3G Rev. 6	Firmed	-	12/17/18	2 pcs	0 pcs	2 pcs	$4,717.00/pcs	$9,434.00
Line Item Note	SIOP												
												Grand Total:	$52,460.55

DAS 38 9-89

Dart Aerospace Ltd.
1270 Aberdeen St
Hawkesbury, ON
K6A 1K7
Canada

Tel (613) 632-5200

PURCHASE ORDER
PO041199

Order Notes

Terms & Condition of Purchasing(Suppliers) and Procurement Quality Clauses are an integral part of our AS9100 requirements. To learn in detail, please visit www.dartaerospace.com for further explanation.

Procurement Quality Clauses
A005 RIGHT OF ENTRY
A007 FIRST ARTICLE INSPECTION (FAI) BY SELLER, (DOCUMENTATION MAINTAINED BY SUPPLIER)
A012 CHEMICAL AND PHYSICAL TEST REPORTS
A016 PERSONNEL QUALIFICATION
A017 RAW MATERIAL IDENTIFICATION (AS APPLICABLE)
A026 CERTIFICATION OF MATERIAL CONFORMANCE
A041 QUALITY MANAGEMENT SYSTEM
A042 DART NOTIFICATION BY SUPPLIER
A043 RETENTION OF QUALITY DOCUMENT

A048 COUNTERFEIT PARTS AVOIDANCE, DETECTION, MITIGATION AND DISPOSITION PROGRAM

A049 SUPPLIER AWARENESS

Plex 10/1/18 11:58 AM dart.Lussier.Patrick

METEC METAL TECHNOLOGY INC.

www.metec.ca | 20 Terry Fox Drive, Vankleek Hill, Ontario, Canada K0B 1R0 | Phone: +1 613-678-3957 Fax: +1 613-678-3956

Packing List

Bill To: **Dart Aerospace Ltd.**
1270 Aberdeen Street
Hawkesbury, ON K6A 1K7
Canada

Ship To: **Dart Aerospace Ltd.**
1270 Aberdeen Street
Hawkesbury, ON K6A 1K7
Canada

Att. Patrick Lussier

Shipment No:	24400	**Customer Code:**	DART
Shipment Date:	17-Dec-2018	**Phone:**	(613) 632-9577
Ship Via:	our truck	**PO Number:**	PO041199 R3
Order Number:	3064		
Order Date:	10/01/18	**Terms:**	Net 60 Days

	Quantity							
Item	Open	Shipped	B/O	Canceled	Unit	Description	Revision	Job Number
1	3	3	0	0	EA	DART-RBW6205G00632-3GP Sling, Main Rotor Blade Lift, drawing # RBW6205G00632-3 Rev.6	6	3064-02

DAS 38 9-89

The delivered goods must be inspected upon receipt to confirm compliance. Should there be discrepancies please notify METEC within 30 days of delivery. The goods are otherwise deemed accepted.

Received In Good Order By
Att. Patrick Lussier

METEC METAL TECHNOLOGY INC.

20 Terry Fox Drive, Vankleek Hill, Ontario K0B 1R0
Tel. (613) 678-3957 & (613) 678-2782 Fax (613) 678-3956 metec@metec.ca

CERTIFICATE OF CONFORMITY

SOLD TO:

Dart Aerospace Ltd.
1270 Aberdeen Street
Hawkesbury, Ont.
K6A 1K7

SHIPPED TO:

same

Quantity	Part Number	Part Name	Dwg Rev.#	P.O. Number
3	DART-RBW6205G00632-3GP	Sling, Main Rotor Blade Lift, drawing # RBW6205G00632-3 Rev.6	6	41199 R3

MATERIAL: supplied by METEC

DAS
38
-89

We hereby certify that the above parts were made in conformance with applicable drawings.

METEC Metal Technology Inc.

George Theoret

Vankleek Hill, December 17, 2018

This drawing, specifications, and concepts contained here in are the sole property of Dart Aerospace, and may not be reproduced or used in any fashion without the prior written permission of Dart Aerospace.

REVISIONS					
REV	ECR	DESCRIPTION	DATE	INITIAL	APPROVED

FIRST ARTICLE WEIGHT TEST

INSPECTION & TESTING PROCEDURES FOR THE
RBW6205G00632-3G, M/R BLADE LIFTING TOOL.
THIS ASSEMBLY IS DESIGNED TO LIFT A MAIN ROTOR.
THIS ASSEMBLY SHOULD BE INSPECTED BEFORE EACH USE.
REPLACE ANY ITEMS THAT ARE DAMAGED OR SUSPECTED
OF DAMAGE BEFORE USING!

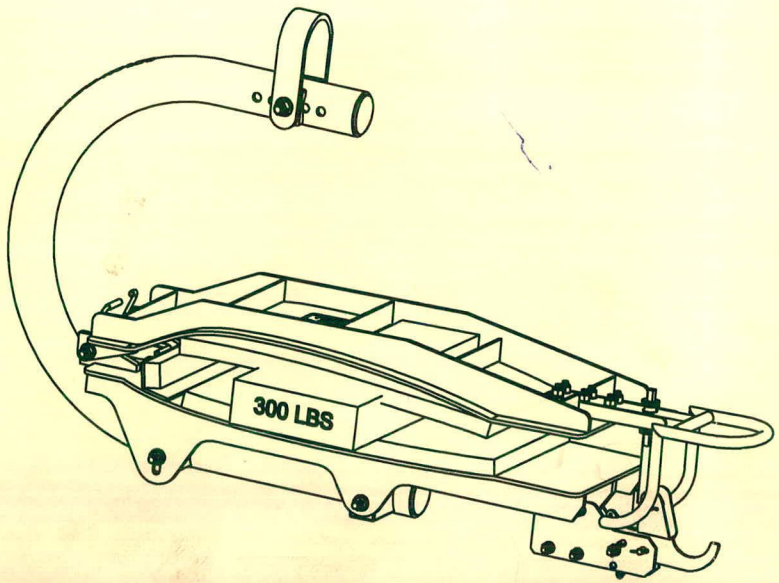

FIRST ARTICLE WEIGHT TEST

1. AFTER INSPECTION, PLACE 300 LBS. IN M/R BLADE LIFTING TOOL. LIFT M/R BLADE LIFTING TOOL USING AN APPROPRIATE LIFTING DEVICE, FOR AT LEAST 5 MINUTES, CONTINUALLY CHECKING FOR CRACKS, DEFLECTION, OR DISTORTION.
3. REMOVE WEIGHT AND RE-INSPECT TOOL, CHECKING FOR STRESS CRACKS, BENDING, OR DISTORTIONS.

INSPECTOR: Guy Mayo

TESTER: [signature]

S.N.: S137938

DATE: 5 Dec 2016

WO # 3064

DART AEROSPACE
190 S. Danebo Ave., Eugene, OR. 97402
1-800-556-4166
e-mail: sales@dartaero.com
dartaerospace.com

TITLE			
TOOL, M/R BLADE LIFTING			
DWG NO. RBW6205G00632-3G	REV 6	CUSTOMER 1 OF 1	
SCALE 1:8	DATE 2/21/2013	SHEET 47 OF 47	